Contact
E-mail
Phone

Customer

Contact
E-mail
Phone

Technical data

Glanded energy-saving single pump
BL-E 32/140-2,2/2-R1

Project name	Untitled project 2017-07-18 13:16:59.325
Project ID	
Installation location	
Customer pos.no	

Date 2017-07-18

Duty chart

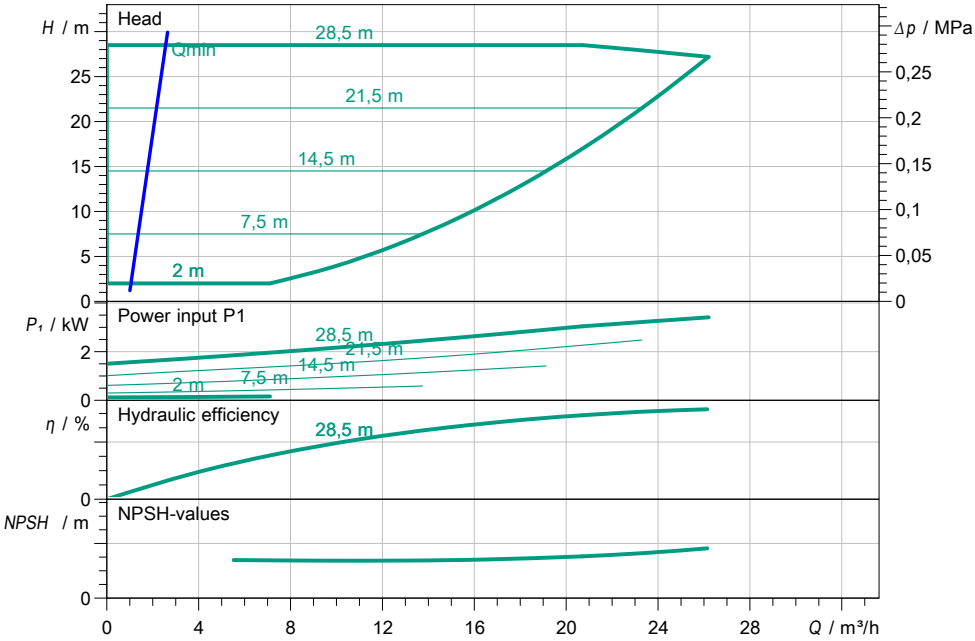

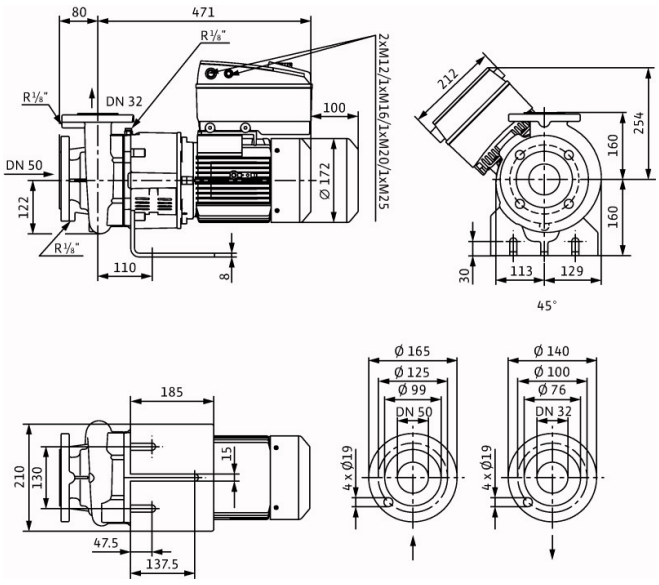

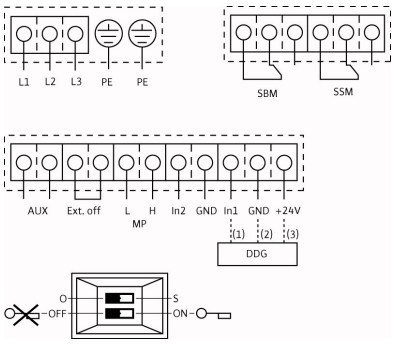

Requested data

Flow	
Head	
Media	Water 100 %
Fluid temperature	20,00 °C
Density	998,30 kg/m³
Kin. viscosity	1,00 mm²/s

Hydraulic data (Duty point)

Flow	
Head	
Power input P1	
NPSH	

Product data

Glanded energy-saving single pump	
BL-E 32/140-2,2/2-R1	
Kind of operation	dp-c
Max. operating pressure	1,6 MPa
Fluid temperature	-20 °C ... + 140 °C
Max. ambient temperature	40 °C
Minimum Efficiency Index (MEI)	≥ 0.40

Motordata per Motor/Pump

Motor type	Standard
Efficiency class	IE4
Mains connection	3~ 400 V / 50 Hz
Permitted voltage tolerance	±10%
Max. speed	2900 1/min
Rated power P2	2,20 kW
Power consumption	2,7 kW
Rated current	7,30 A
Degree of protection	IP 55
Insulation class	F
Motor protection	yes

Fitting dimensions

Pipe connection on the suction side	DN 50, PN 16
Pipe connection on the pressure side	DN 32, PN 16
Port to Port	

Materials

Pump housing	EN-GJL-250
Impeller	EN-GJL-200
Lantern	EN-GJL-250
Pump shaft	1.4122
Mechanical seal	AQEGG

Information for order placements

Weight approx.	54 kg
Item number	2159698